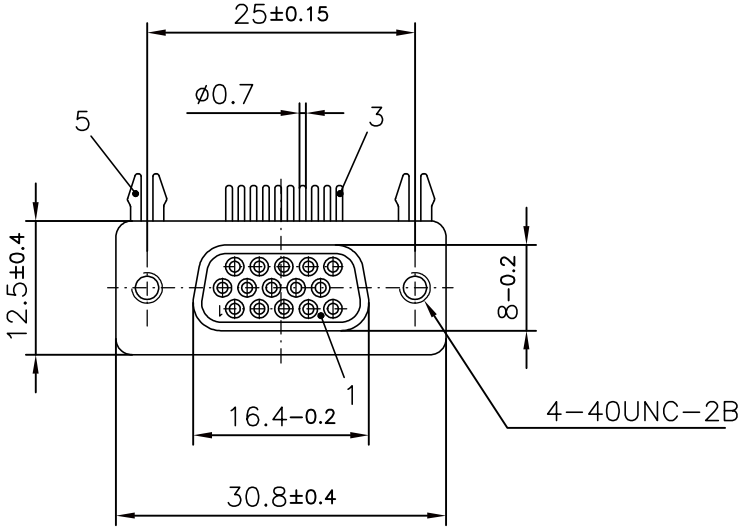

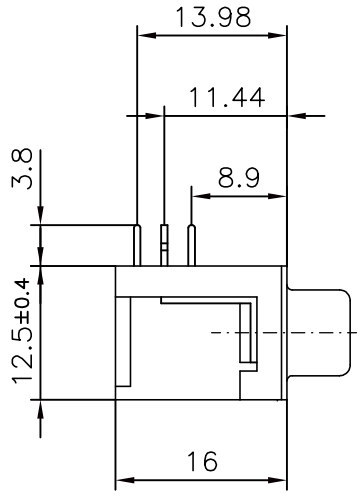

PCB hole pattern, mounting side

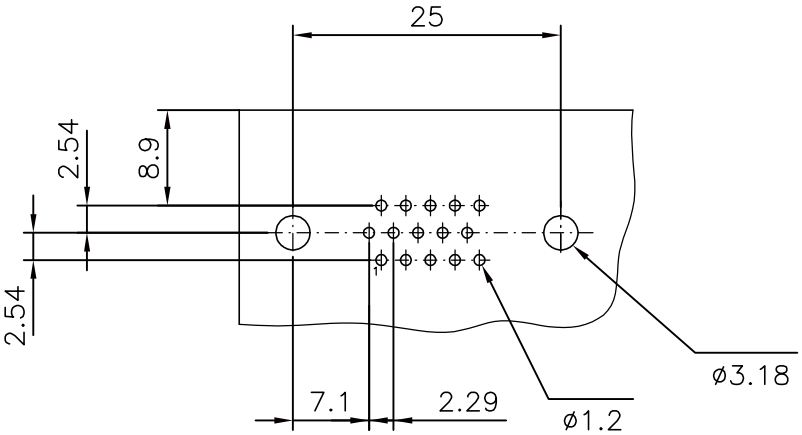

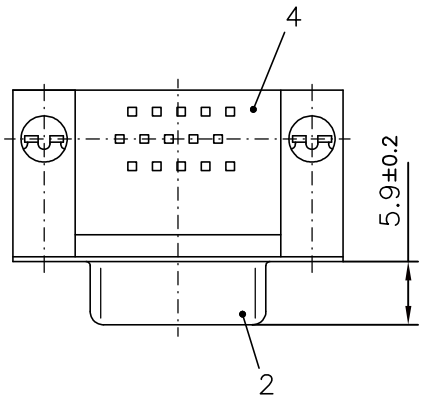

No.	St.	Part	Type Description/Material	Surface plating/Colour/Class
9	–	–	–	–
8	–	–	–	–
7	–	–	–	–
6	–	–	–	–
5	2	Snap–in bracket	Bz4	tin plated
4	1	Bracket	Plastic	black
3	15	Signal contact	S5 / Brass	0.1µm Au over Ni
2	1	Shell	Steel	tin plated
1	1	Insulator	Thermoplastic, GV UL94V–0	

FCT electronic gmbh München

Measurement without tolerance acc. to ISO 2768–m

Original: DIN A3–drawing as a file

Scale 2:1

Replacement for: –

Drawing–No.: CT09–15S5–L228

Sheet 1/1

Part–No.: CT09–15S5–L228

Ch.–No.	Rev.	Date	Name		Date	Name
–	–	–	–	Drawn	19.09.2001	Schref
				Checked	23.05.2002	Floßmann

Title: High Density D–Sub Connector

COMMENT:
ALL RIGHTS ARE RESERVED BY US FOR THIS DRAWING. WITHOUT OUR PRIOR CONSENT, IT MAY NEITHER BE DUBLICATED NOR MADE AVAILABLE TO A THIRD PARTY, AND IT ALSO MAY NOT BE IMPROPERLY USED BY THE RECEIVER, OR A THIRD PARTY.